HA006L

Payload 6Kgf

Installation method	
Floor	●
Ceiling	
Wall surface	

Application	
Spot welding	
Arc welding	●
Handling	●
Assembly	
Sealing	●
Painting	

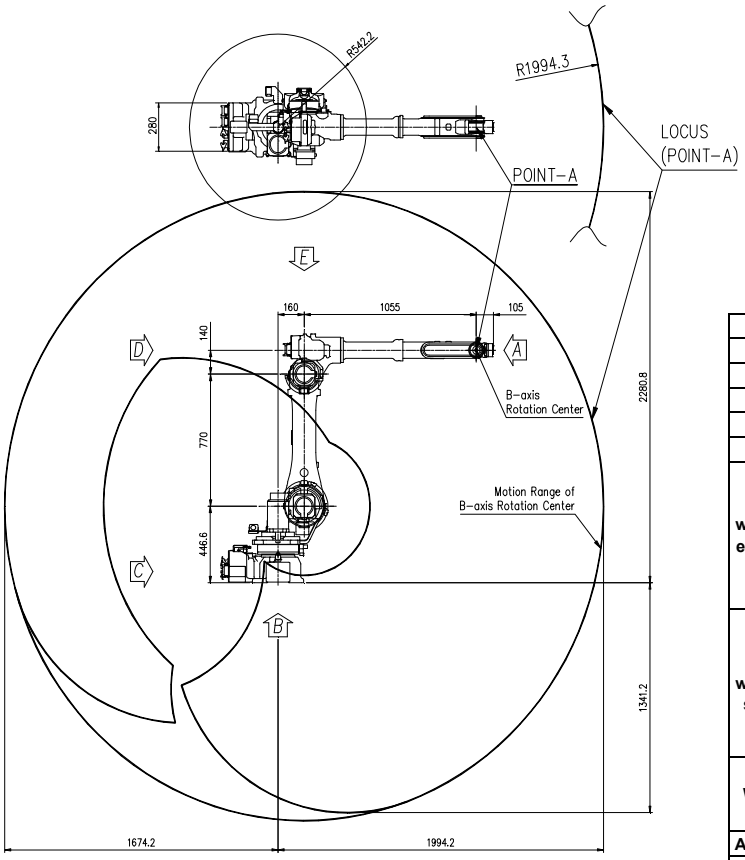

Item				Specification
Robot model				HA006L
Payload				6 Kg
Structure				Articulated
Degree of freedom				6 axes
Drive system				AC SERVO MOTOR
Max. working envelope	Arm	S	Swivel	±3.229 rad (±185°)
		H	Horizontal	+3.403 ~ -1.222rad (+195° ~ -70°)
		V	Vertical	+3.141 ~ -1.396rad (+180° ~ -80°)
	Wrist	R2	Rotation 2	±3.403 rad (±195°)
		B	Bending	±2.356 rad (±135°)
		R1	Rotation 1	±6.283 rad (±360°)
Max. working speed	Arm	S	Swivel	3.316 rad / s (190° / s)
		H	Horizontal	3.142 rad / s (180° / s)
		V	Vertical	3.316 rad / s (190° / s)
	Wrist	R2	Rotation 2	6.63 rad / s (380° / s)
		B	Bending	7.50 rad / s (430° / s)
		R1	Rotation 1	11.17 rad / s (640° / s)
Wrist torque		R2	Rotation 2	39.2 Nm (4.0 Kgfm)
		B	Bending	9.8 Nm (1.0 Kgfm)
		R1	Rotation 1	5.9 Nm (0.6 Kgfm)
Accuracy of position repeatability				±0.08 mm
Ambient Temperature				0 ~ 45 °C (273 ~ 318 K)
Robot's Weight				224 Kg
Working envelope section area				7.88 ㎡

View A: Detailed drawing of the wrist attachment part

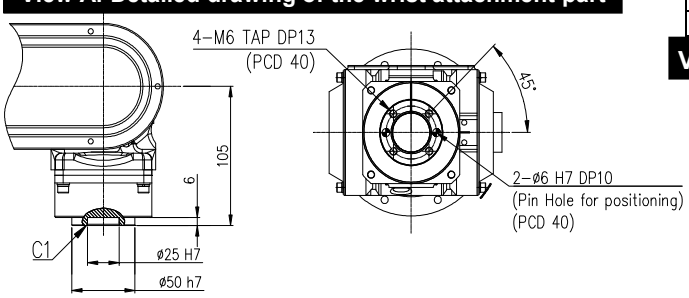

View B: Dimensional drawing for the floor installation of the body

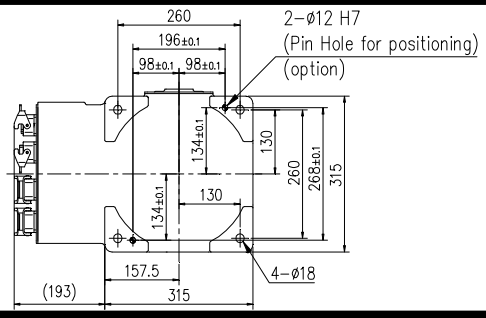

Wrist-axis torque line diagram

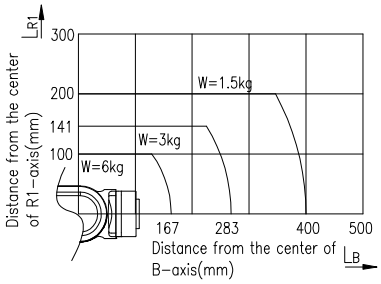

View C: Application cable connection part (Option)

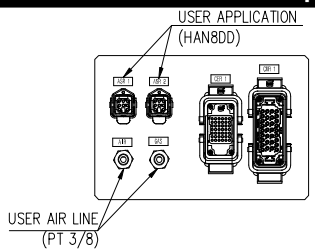

View D: Application cable connection part (Option)

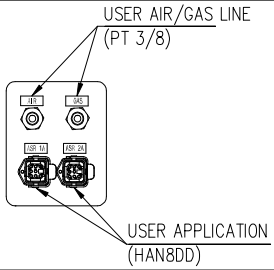

View E: Details of the application ancillary part attachment

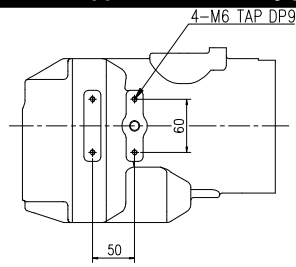

** For product improvement, some of the ratings, specifications, dimensions, etc. are subject to changes without notice.

HYUNDAI ROBOTICS
Homepage : http://www.hyundai-robotics.com

Head Office : TEL. +82-1588-9997
Ulsan Office : TEL. +82-53- 670-7055
Jungbu Office : TEL. +82-41-534-4295
Gwangju Office: TEL. +82-62-363-5272

A/S Center : TEL. +82-1588-9997