YP015A-

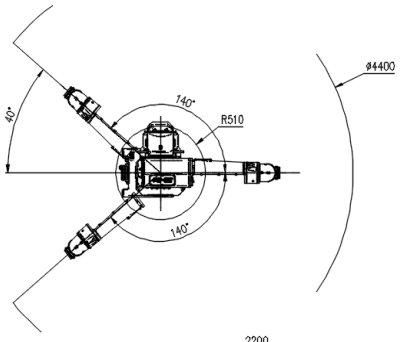

Installation	
Floor	●
Ceiling	
Wall	

Application	
Spot Welding	
Arc Welding	
Handling	
Assembly	
Sealing	
Painting	●

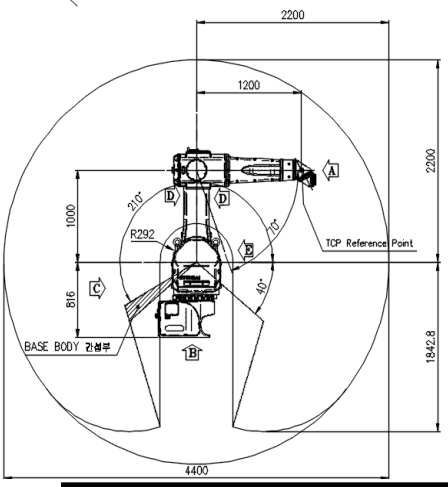

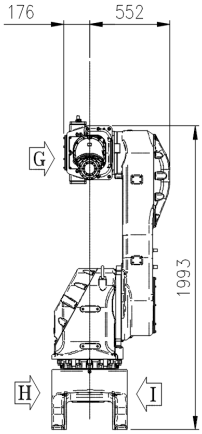

VIEW A Wrist Flange pec.

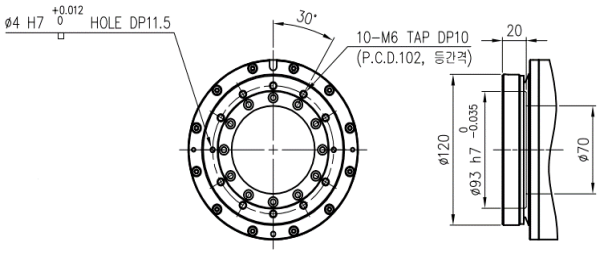

Items			Specification
Model			YP015-22
Payload		Wrist	15 Kg
		Outer arm	15 Kg
		Inner arm	15 Kg
Structure			Articulated
Degree of Freedom			6 Axes
STROKE	Main	S	±2.443 rad (±140°)
		H	-0.873 ~ +4.014 rad (-40° ~ +210°)
		V	-1.222 ~ +4.537 rad (-70° ~ +90°)
	Wrist	R2	±6.283 rad (±360°)
		B	±6.283 rad (±360°)
		R1	±6.283 rad (±360°)
SPEED	Main	S	2.793 rad/s (160°/s)
		H	2.793 rad/s (160°/s)
		V	2.793 rad/s (160°/s)
	Wrist	R2	7.854 rad/s (450°/s)
		B	9.425 rad/s (540°/s)
		R1	10.472 rad/s (600°/s)
Repeatability			±0.2 mm
Ambient Condition		Temp.	0 ~ 40 °C (273 ~ 313 K)
		Humid.	20~85%RH (non-condensing)
Weight			600 kg
Certificate No.			IECEx DEK 20.0016 (DEKRA 20ATEX0028)
Explosion Proof		Ex Code	Ex ib [ib] pxb IIB T4 Gb Ex 2 G Ex ib [ib] pxb IIB T4 Gb
		Ex ib	Intinsic Safety (Zone 1)
		pxb	Pressurised
		IIB	Gas Group : Ethylene
		T4	Maximum Surface Temp. of Equipment : 135 °C
		Gb	Zone 1

*) Wall Installation : S-Axis speed 1.745rad/s (100°/s)

VIEW E Bolt Spec. for App.Cable

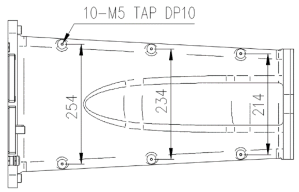

VIEW B Body Installation

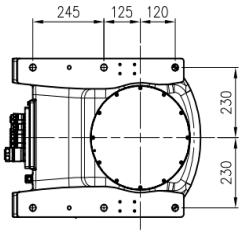

VIEW F Bolt Spec. for App.

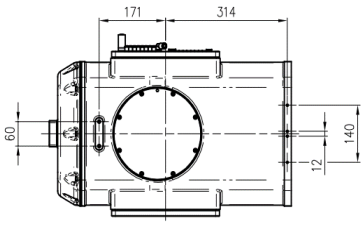

VIEW D Bolt Spec. for App.Cable

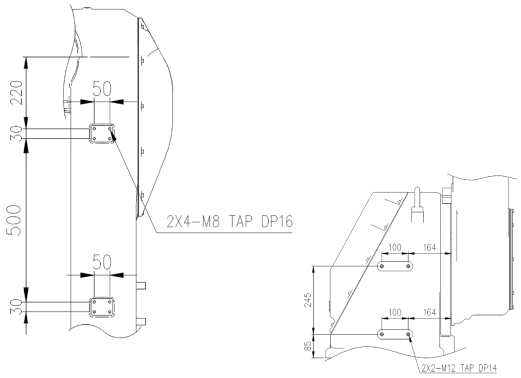

VIEW C Application Cable

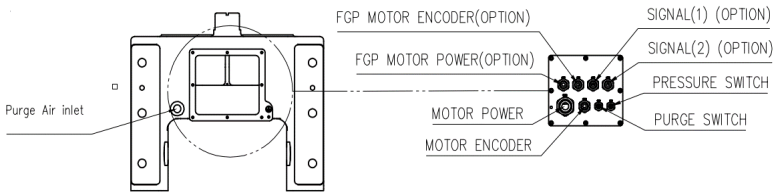

** Technical specification subject to change without notice

HYUNDAI ROBOTICS
Homepage: http://www.hyundai-robotics.com

Head Office : TEL: (053) 670-7049, 7065 A/S Center : TEL: (053) 670-7115
Ulsan Office : TEL: (053) 670-7116
Pyeongtaek Office : TEL: (031) 684-4295~6
Gwangju Office : TEL: (062) 363-5272